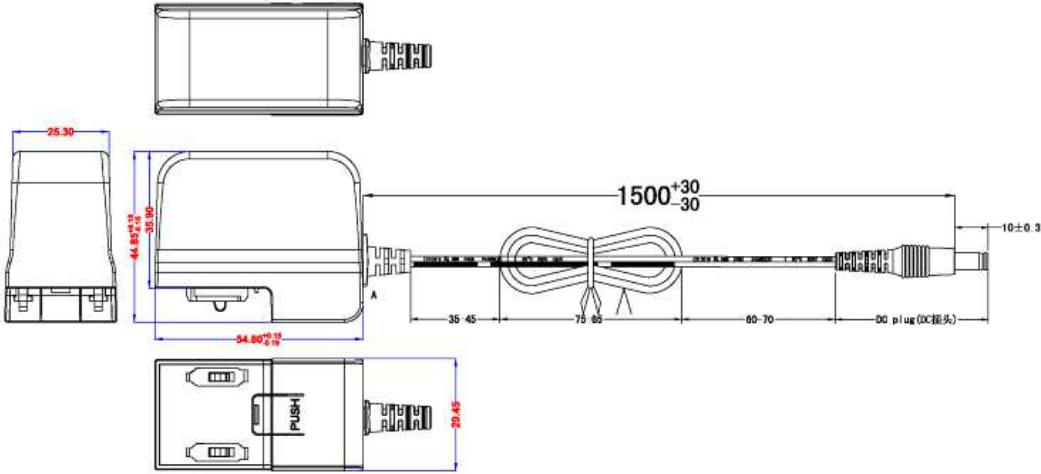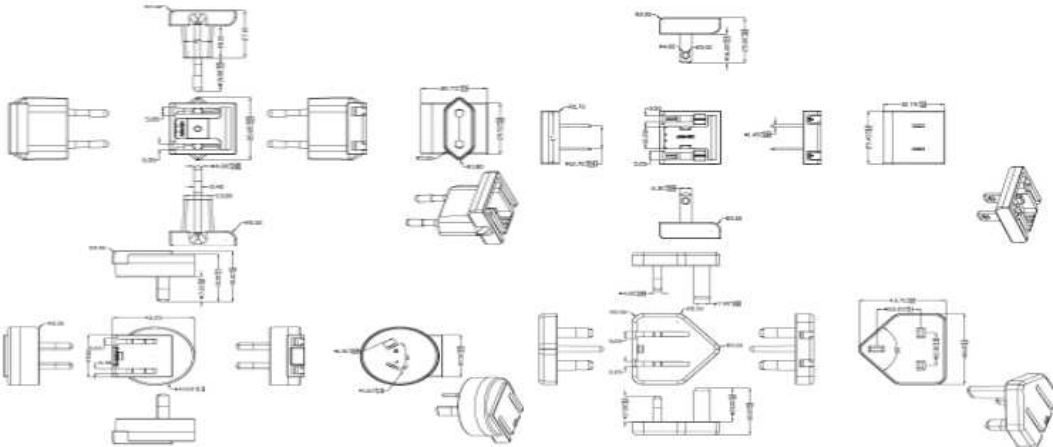
25.30
35.90
44.85
54.80
1500+30 -30
10±0.3
A
35-45
75-85
60-70
DC plug(DC插头)
PUSH
29.45